5 HEAT EXCHANGER

QVF

PROCESS PLANT COMPONENTS

P 305 e.3

Copyright © 2007, QVF Engineering GmbH. All rights reserved.

Introduction

QVF heat exchangers provide the optimum solution for every requirement encountered in practice because of the wide range of types available. This applies not only to coil type heat exchangers, which are available as condensers, boilers and immersion heat exchangers, but also to shell and tube heat exchangers, which are designed for use with tubes in the widest possible range of corrosion resistant materials.

These items are widely used in the chemical, pharmaceutical and allied industries together with other applications such as food and drink production, dye works and electroplating. This is because of the special properties of borosilicate glass 3.3 and all the other materials used plus the fact that borosilicate glass 3.3 is an approved and proven material of construction for pressure vessels.

Reference should also be made in this context to the extreme reliability of the strong and high-duty coupling system used for all components. This is achieved throughout the whole range of nominal sizes by the use of the safety buttress end which has been designed specifically by taking into account the properties of the material coupled with a reliable flange system.

The complete range of standard heat exchanger components is described on the following pages. Non-standard components that can be supplied to special order are referred to in the respective product description.

A detailed listing of all heat exchangers by »Description« and »Catalogue Reference« can be found in the »Index«.

Detailed information on a number of the topics referred to in the following pages can be found in Section 1 »Technical Information«.

Details of the design of the different types of optimised buttress ends are illustrated alongside.

DN15 - DN150

DN200 - DN300

DN450 - DN1000

GMP compliant installations

The use of heat exchangers and the layout of interconnecting pipeline incorporating valves when designing plant and equipment complying with GMP regulations, calls for special care in both the planning and selection of the components used together with the materials of construction used for them. Borosilicate glass 3.3 has a number of special properties that are highly valued in the pharmaceutical industry and these in conjunction with materials approved in accordance with the FDA catalogue, such as PTFE (bellows, lining, coating), glass-lined steel (heat exchanger shells) and special materials (silicon carbide etc.) ensure that any build-up of unwanted deposits is avoided in areas which come in contact with the product. A design without any dead space, which ensures that components drain fully and can be cleaned easily and effectively, is achieved by the shape of the components (e.g. coil and circular ring type heat exchangers) and the way they are installed. Where the external surfaces of these components have to comply with clean room requirements, appropriate stainless steel coupling and support material can be supplied (please see Section 9 »Couplings« and Section 10 »Structures and Supports«).

We would be happy to advise you on the basis of the regulatory requirements applicable to a particular case and the guidelines drawn up by us for the design of GMP compliant plant.

Coated heat exchangers

Damage to borosilicate glass 3.3 assemblies resulting from accidental external causes cannot be entirely excluded, especially in the smaller nominal sizes. This is primarily due to the relatively rigorous conditions prevalent in production plants and applies especially where no additional protection is provided in the form of insulation.

Our answer to this problem is to provide borosilicate glass 3.3 heat exchangers with a Sectrans transparent coating. This can be applied irrespective of the shape of the component and it provides additional protection without having any adverse effect on visual monitoring of the process.

A glass fibre reinforced polyester coating providing a higher level of protection can also be supplied on request. This does have a slightly adverse effect on the transparency of the glass, making it translucent and not transparent.

Permissible operating conditions

While the maximum permissible operating temperature for borosilicate glass 3.3 heat exchanger bodies is generally 200 °C ($\Delta\Theta \leq 180$ K), the maximum permissible operating pressure is governed by the main nominal size of the component but not by its shape. Detailed information on this can be found in Section 1 »Technical Informaton«.

The maximum permissible figures for pressure and temperature gradient across the heat exchange surfaces and PTFE tube plates (between the media) and the permissible operating conditions for components in other materials can be found in the respective product description.

Glass components suitable for higher permissible operating conditions can also be supplied on request.

COIL TYPE HEAT EXCHANGERS

Unlike the shell and tube heat exchangers described on pages 5.15 to 5.22 these items have the coil battery welded to the jacket. This is of importance for plant which has to conform to GMP requirements since it ensures that the product and the coolant cannot come into contact with each other.

Coil type heat exchangers are mainly used as condensers or coolers. They can, however, be used for heat transfer between liquids and gases in general. Turbulent flow is ensured even in the larger nominal bores since the coil layers are offset and fill the flow cross-section to a great extent.

Information on pressure drop in the coils together with performance data which can be used to estimate the heat transfer surface required can be found on pages 5.6 and 5.7. We would be happy to carry out detailed design work for you.

The permissible pressure difference across the wall of the coils as a function of the temperature difference at that point is indicated in the diagram below. The specified DQ is the difference between the temperature of the shell side medium and the medium inside the coils. The permissible pressure difference is valid up to an overall heat transfer coefficient of U=290 $Wm^{-2} K^{-1}$ wich covers most practical applications.

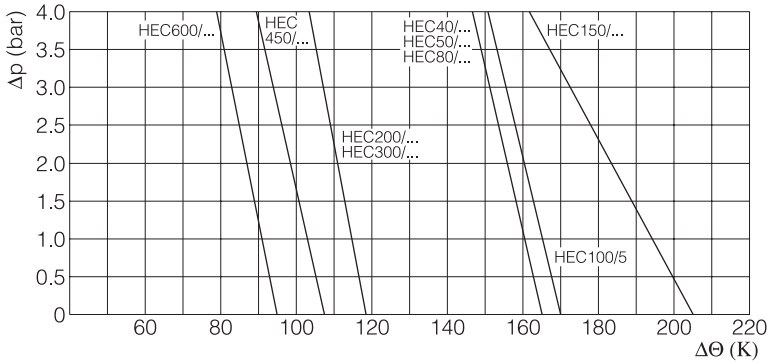

Permissible pressure difference between coil and jacket as a function of the temperature difference between the products in the two areas.

The inlet and outlet connections are of the safety buttress end type. If they are aligned horizontally and if long or heavy hoses are connected to them, we recommend 90° hose connectors to reduce the bending moment on the branches.

When installing coil-type heat exchangers appropriate precautions should be taken. Details of these can be found in the installation and operating instructions enclosed with each item. The main points to be taken into account when planning to use these items as coolers are (see also flow chart below):

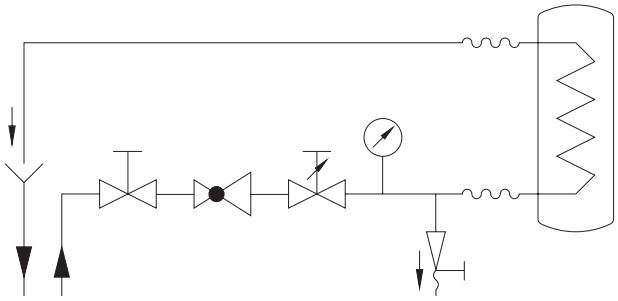

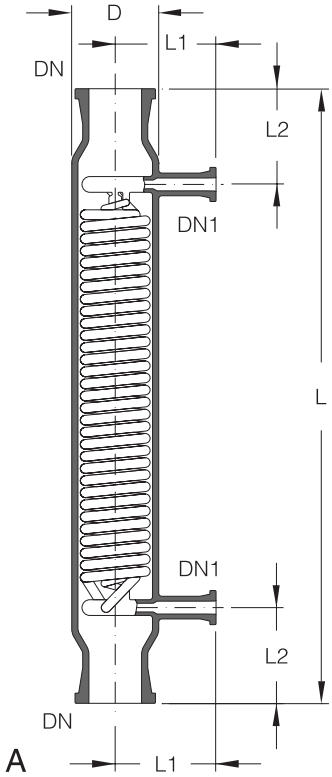

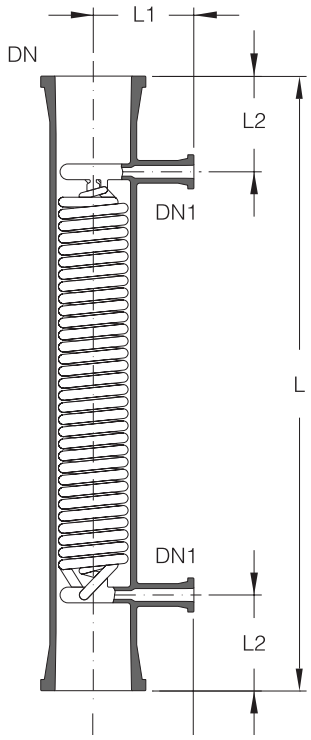

COIL TYPE HEAT EXCHANGERS

- The use of hoses or bellows on the cooling water connections to avoid imposing stresses.
- Fitting a pressure reducing valve (if necessary), control valve, non-return valve (not when used under re-cool conditions) and pressure gauge immediately before the heat exchanger.
- Free drainage of the cooling water from the coils, if it is not possible to provide other means of ensuring that the permissible operating pressure (see page 5.4) is not exceeded.
- Ball valves or other rapid opening valves must not be used in the inlet lines to coil type heat exchangers to avoid any water hammer in the coil.

Up to DN 150 nominal bore coil type heat exchangers can also be installed horizontally (with a slight fall).

The end form, which depends on the nominal size, is shown in the diagram on page 5.2. Further information can be found in Section 1 »Technical Information«.

Area (m²)	DN	DN1	D	L	L1	L2	Type	Reference
0,2	40	15	60	610	75	95	A	HEC40/2
0,3	50	15	85	610	100	95	A	HEC50/3
0,3	80	15	-	610	100	95	B	HEC80/3
0,5	100	15	-	610	125	80	B	HEC100/5
0,7	150	25	-	610	150	100	C	HEC150/7
1,0	150	25	-	840	150	100	C	HEC150/10
1,0	200	25	-	500	175	95	D	HEC200/10
1,5	200	25	-	725	200	95	D	HEC200/15
2,5	300	25	-	600	275	100	E	HEC300/25
4,0	300	25	-	825	275	100	E	HEC300/40
6,0	450	25	-	850	350	125	E	HEC450/60
8,0	450	25	-	900	350	125	E	HEC450/80
12,0	600	50	-	1100	450	150	E	HEC600/120
15,0	600	50	-	1250	450	150	E	HEC600/150

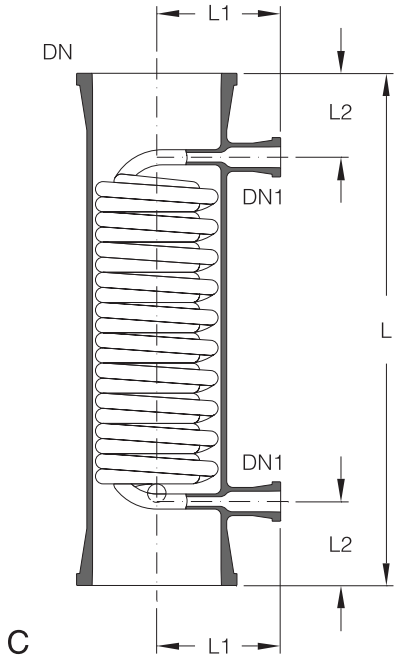

C

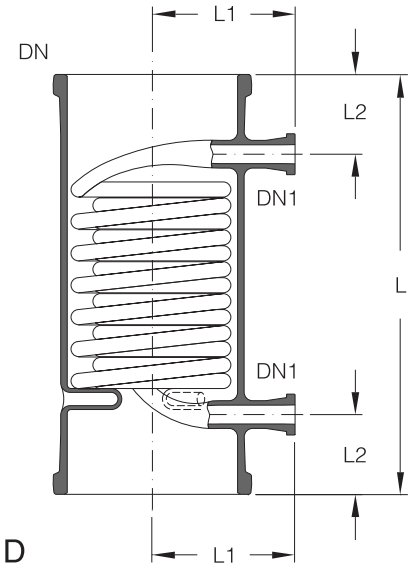

D

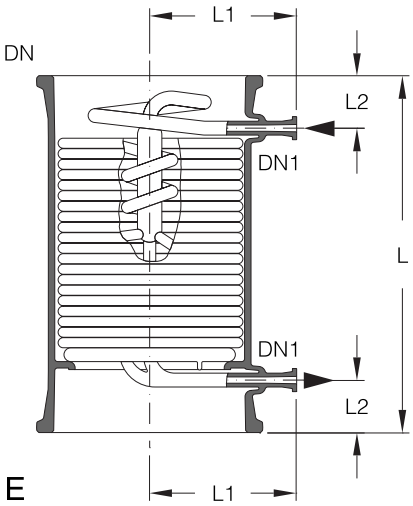

E

COIL TYPE HEAT EXCHANGERS

Technical data

Reference	Area (m²)	Free cross sec. area shell (cm²)	Capacity Coil (l)	Capacity Jacket (l)
HEC40/2	0,2	4,5	0,16	0,9
HEC50/3	0,3	5,5	0,35	1,7
HEC80/3	0,3	5,5	0,35	2,1
HEC100/5	0,5	18	0,7	3,8
HEC150/7	0,7	70	1,9	8,3
HEC150/10	1,0	70	2,7	11
HEC200/10	1,0	90	2	12
HEC200/15	1,5	90	4	16
HEC300/25	2,5	250	6	32
HEC300/40	4,0	250	10	40
HEC450/60	6,0	450	26	91
HEC450/80	8,0	450	28	95
HEC600/120	12,0	700	65	215
HEC600/150	15,0	700	69	263

Performance data

An approximate calculation of heat transfer surface areas can be based on the following guide figures for heat transfer coefficients.

Jacket side Medium	Vapour to be condensed	Liquid	Gas
Coil side medium	Cooling water	Cooling water	Cooling water
Heat transf. coeff. $Wm^{-2}K^{-1}$)	290	175	50

The table below shows figures calculated on this basis for the condensation of steam at atmospheric pressure and a cooling water throughput for a maximum pressure drop of 2,5 bar in the coils (inlet temperature 20 °C):

Reference	Area (m²)	Coolant throughput (l/h)	Steam condensed kg/h)
HEC40/2	0,2	700	7
HEC50/3	0,3	1200	12
HEC80/3	0,3	1200	12
HEC100/5	0,5	2200	18
HEC150/7	0,7	3000	45
HEC150/10	1,0	2300	60
HEC200/10	1,0	2150	45
HEC200/15	1,5	1650	60
HEC300/25	2,5	2750	85
HEC300/40	4,0	2600	125
HEC450/60	6,0	6100	230
HEC450/80	8,0	5800	280
HEC600/120	12,0	7300	330
HEC600/150	15,0	6300	370

COIL TYPE HEAT EXCHANGERS

Pressure drop diagram

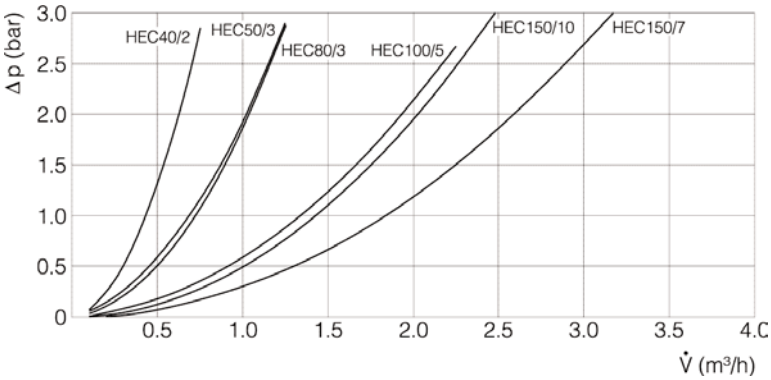

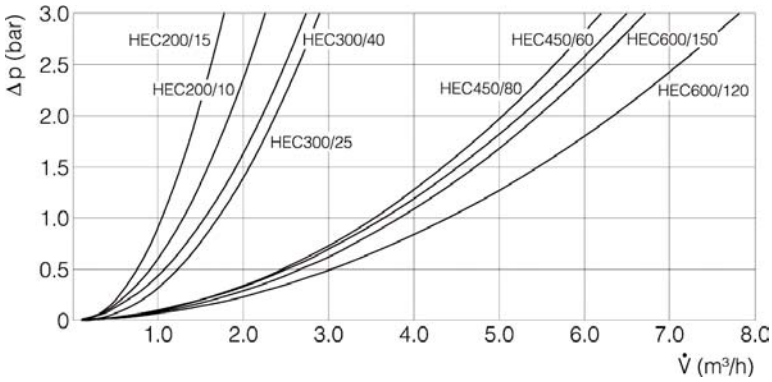

Pressure drop in the coil as a function of throughput (water, 20 °C).

COIL TYPE BOILERS

This type of heat exchanger is predominantly used in circulatory evaporators.

Performance data which can be used to estimate the heat transfer surface required can be found on page 5.9. We would be happy to carry out detailed design work for you.

Coil type heat exchangers suitable for heat transfer between liquids and gases in general are described on pages 5.4 to 5.7.

The permissible pressure difference across the wall of the coils as a function of the temperature difference at that point is indicated in the diagram below. The specified ΔΘ is the difference between the temperature of the shell side medium and the medium inside the coils. The permissible pressure difference is valid up to an overall heat transfer coefficient of U=290 $Wm^{-2} K^{-1}$ wich covers most practical applications.

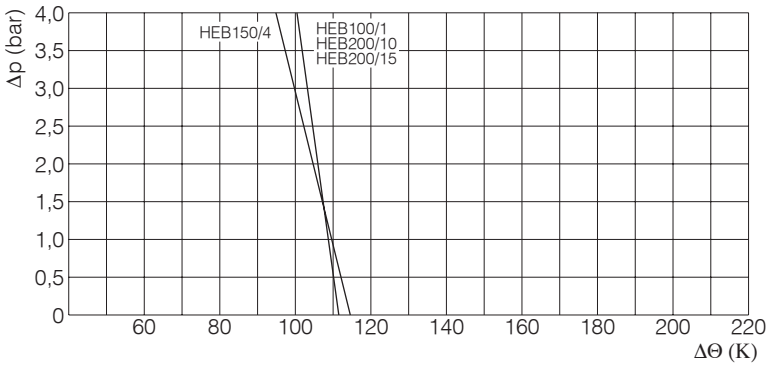

Permissible pressure difference between coil and jacket as a function of the temperature difference between the products in the two areas.

The inlet and outlet connections are of the safety buttress end type. If they are aligned horizontally and if long or heavy hoses are connected to them, we recommend 90° hose connectors to reduce the bending moment on the branches.

When installing boiler type heat exchangers appropriate precautions should be taken. Details of these can be found in the installation and operating instructions enclosed with each item. The main points to be taken into account when planning to use these items are (see also flow chart below):

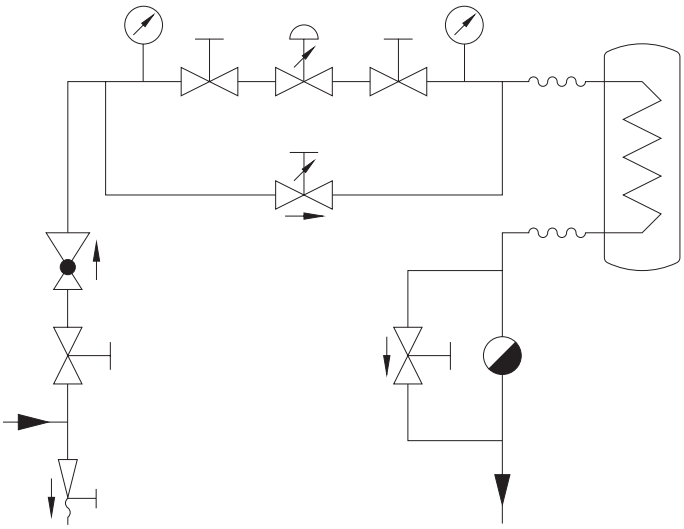

COIL TYPE BOILERS

- The use of hoses or bellows on the steam and condensate connections to avoid imposing stresses.
- Provision for sufficient fall on the steam inlet and condensate outlet lines.
- Fitting a pressure reducing valve (if necessary), control valve and pressure gauge immediately before the boiler and a reliable system to clear condensate with a by-pass valve (for use during start-up) immediately after the boiler.
- Ball valves or other rapid opening valves must not be used in the inlet lines to coil type boilers to avoid any pressure hammer in the coil.

Coil type boilers should not be fitted at the bottom of columns or vessels, since adequate circulation cannot be guaranteed in such locations. Delay in boiling can occur which in turn may result in breakage of the coil.

The pipe end form, which depends on the nominal size, is shown in the diagram on page 5.2. Further information can be found in Section 1 »Technical Information«

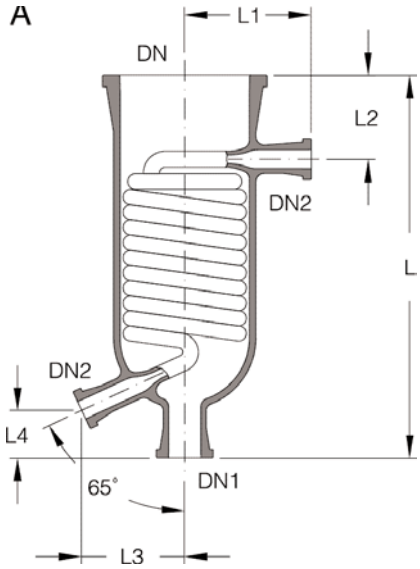

Area (m²)	DN	DN1	DN2	L	L1	L2	L3	L4	Type	Reference
0,1	100	25	25	380	125	100	103	46	A	HEB100/1
0,4	150	40	25	455	150	100	122	57	A	HEB150/4
1,0	200	40	25	615	175	100	110	45	B	HEB200/10
1,5	200	40	25	775	175	100	110	45	B	HEB200/15

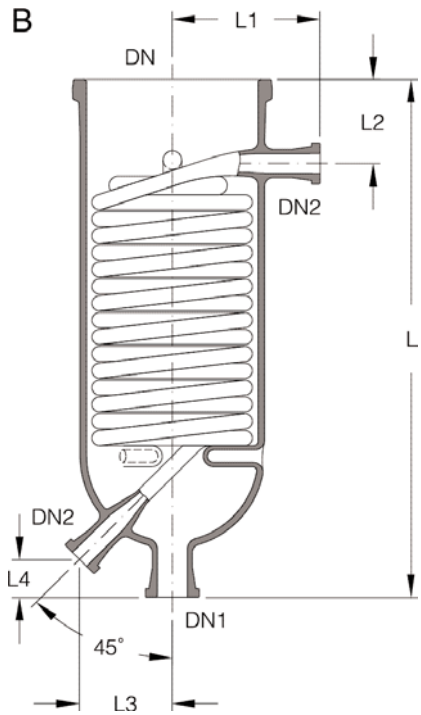

Technical data

Reference	Area (m²)	Capacity Coil (l)	Capacity Jacket (l)
HEB100/1	0,1	0,25	2,3
HEB150/4	0,4	1,0	4,7
HEB200/10	1,0	2,1	14
HEB200/15	1,5	3,2	15

Performance data

For approximate calculation of evaporation performance the heat transferred in all sizes can be considered on average as 400 Wm^{-2} K^{-1} with a steam pressure in the coils of 3.0 bar g. This figure declines marginally at lower pressures.

The table below shows figures calculated on this basis for the evaporation of water with an inlet temperature of 100 °C and at atmospheric pressure (if the feed is cold, the performance of the boiler will be only about 80% of the figures quoted):

Reference	Area (m²)	Steam pressure (bar g)	Water evaporated (kg/h)
HEB100/1	0,1	2	2,7
		3	3,3
HEB150/4	0,4	2	12,5
		3	16,5
HEB200/10	1,0	2	20
		3	24
HEB200/15	1,5	2	29
		3	37

IMMERSION HEAT EXCHANGERS

This type of heat exchanger is predominantly used in vessels to heat or cool products in conjunction with stirring duties. Suitable vessels are spherical vessels with large bottom outlet (similar to type »VSH..«) or cylindrical vessels with a bottom outlet of appropriate nominal size which can also be supplied on request.

Performance data which can be used to estimate the heat transfer surface required can be found at the end of this section. We would be happy to carry out detailed design work for you.

The permissible pressure difference across the wall of the coils as a function of the temperature difference at that point is indicated in the diagram below. The specified ΔΘ is the difference between the temperature of the shell side medium and the medium inside the coils. The permissible pressure difference is valid up to an overall heat transfer coefficient of U=290 $Wm^{-2} K^{-1}$ wich covers most practical applications.

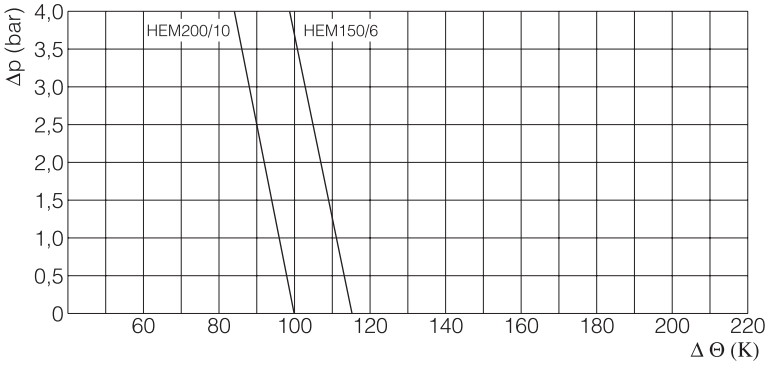

Permissible pressure difference between coil and jacket as a function of the temperature difference between the products in the two areas.

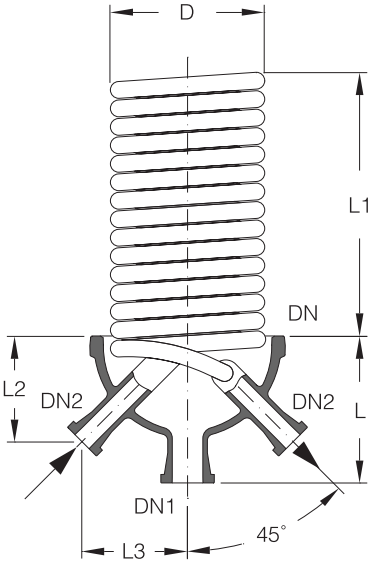

DN200

The inlet and outlet branches are of the safety buttress end type. Borosilicate glass 3.3 and metal hose connectors can be found in section 2 »Pipeline Components« and steam hoses, which can also be used on the condensate side, in section 9 »Couplings«.

When installing immersion heat exchangers appropriate precautions should be taken. Details of these precautions can be found in the installation and operating instructions supplied with each item. The main points to be taken into account when planning to use these items as coolers or boilers can be found on pages 5.4 and 5.5 under »Coil-Type Heat Exchangers« or alternatively on pages 5.8 and 5.9 under »Coil-Type Boilers«.

The pipe end form, which depends on the nominal size, is shown in the diagram on page 5.2. Further information can be found in Section 1 »Technical Information«.

Area (m^2)	DN	DN1	DN2	D	L	L1	L2	L3	Capacity (l)	Reference
0.6	150	40	25	128	185	290	133	113	1.1	**HEM150/6**
1.0	200	40	25	184	175	355	126	126	2.9	**HEM200/10**

IMMERSION HEAT EXCHANGERS

Performance data

For approximate calculation of evaporation performance the heat transferred in all sizes can be considered on average as 400 W/m2K with a steam pressure in the coils of 3.0 bar g. This figure declines marginally at lower pressures.

The table below shows figures calculated on this basis for the evaporation of water with an inlet temperature of 100 °C and at atmospheric pressure (if the feed is cold, the performance of the boiler will be only about 80% of the figures quoted):

Reference	Area (m^2)	Steam pressure (bar g)	Water evaporated (kg/h)
HEM150/6	0,6	2	13,5
		3	17,5
HEM200/10	1,0	2	20
		3	28

LIQUID COOLERS

These liquid coolers are used typically for the cooling of products from distillation columns and can be connected directly to the reflux head in a column.

As the product flows through the coil battery, the pressure drop indicated in the diagram below should be taken into account. It must exist as a static feed height before the cooler.

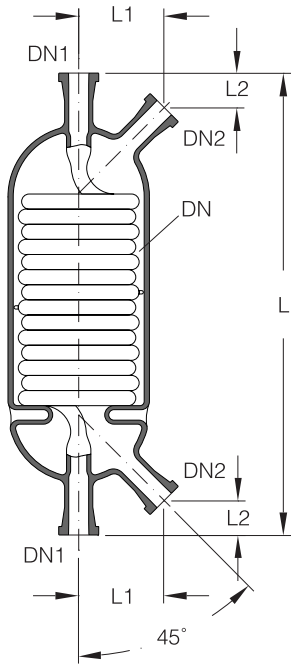

The permissible pressure difference across the wall of the coils as a function of the temperature difference at that point is indicated in the diagram below. The specified ΔΘ is the difference between the temperature of the shell side medium and the medium inside the coils. The permissible pressure difference is valid up to an overall heat transfer coefficient of U=290 $Wm^{-2} K^{-1}$ wich covers most practical applications.

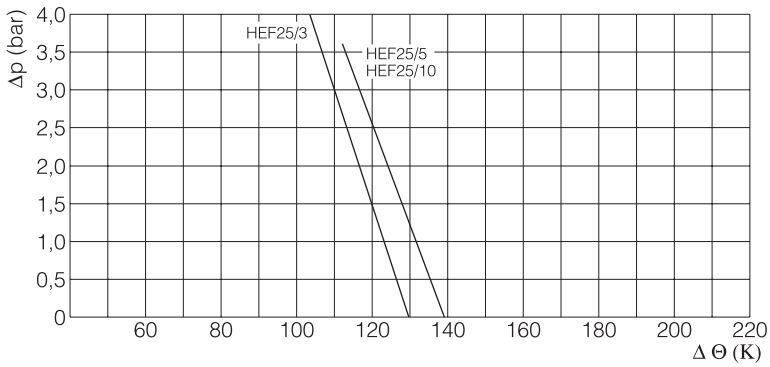

Permissible pressure difference between coil and jacket as a function of the temperature difference between the products in the two areas.

The inlet and outlet connections are of the safety buttress end type. If they are aligned horizontally and if long or heavy hoses are connected to them, we recommend 90° hose connectors to reduce the bending moment on the branches.

Borosilicate glass 3.3 and metal hose connectors can be found in Section 2 »Pipeline Components« and hoses are in section 9 »Couplings«.

Area (m^2)	DN	DN1	DN2	L	L1	L2	Reference
0,3	100	25	25	550	85	38	**HEF25/3**
0,5	150	25	25	550	104	43	**HEF25/5**
1,0	150	25	25	750	104	43	**HEF25/10**

Technical data

Reference	Area (m^2)	Capacity Coil (l)	Capacity Jacket (l)
HEF25/3	0.3	0.6	2.5
HEF25/5	0.5	1.2	5.2
HEF25/10	1.0	2.1	7.3

LIQUID COOLERS

Pressure drop diagram

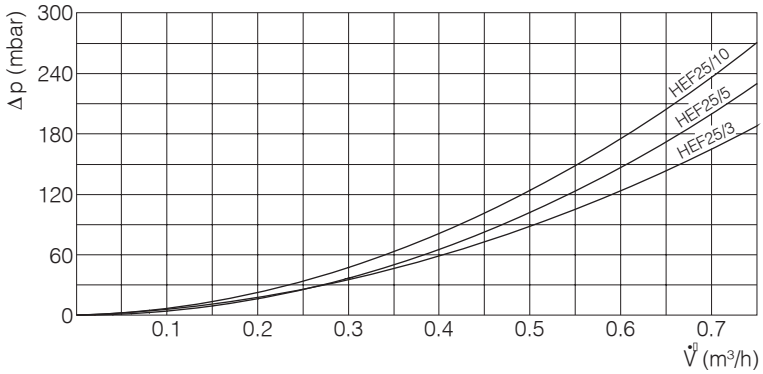

Pressure drop in the coil based on water at 20 °C

VENT CONDENSERS

These items are installed before vacuum pumps or in vent gas lines to remove any components in vapour form still remaining in the gas stream after the main condenser. Their compact design makes them ideal for fitting directly in pipework without the need for any reduction.

The permissible pressure difference across the wall of the coils as a function of the temperature difference at that point is indicated in the diagram below. The specified ΔΘ is the difference between the temperature of the shell side medium and the medium inside the coils. The permissible pressure difference is valid up to an overall heat transfer coefficient of U=290 $Wm^{-2} K^{-1}$ wich covers most practical applications.

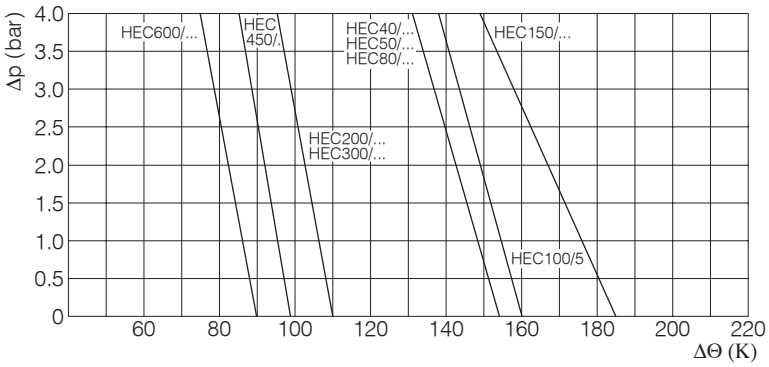

Permissible pressure difference between coil and jacket as a function of the temperature difference between the products in the two areas.

VENT CONDENSERS

The inlet and outlet connections are of the safety buttress end type. If they are aligned horizontally and if long or heavy hoses are connected to them, we recommend 90° hose connectors to reduce the bending moment on the branches.

Borosilicate glass 3.3 and metal hose connectors can be found in Section 2 »Pipeline Components« and hoses are in section 9 »Couplings«.

Area (m²)	DN	DN1	DN2	L	L1	L2	Reference
0,6	100	25	15	800	100	125	**HEG25/6**
0,6	100	50	15	800	100	125	**HEG50/6**

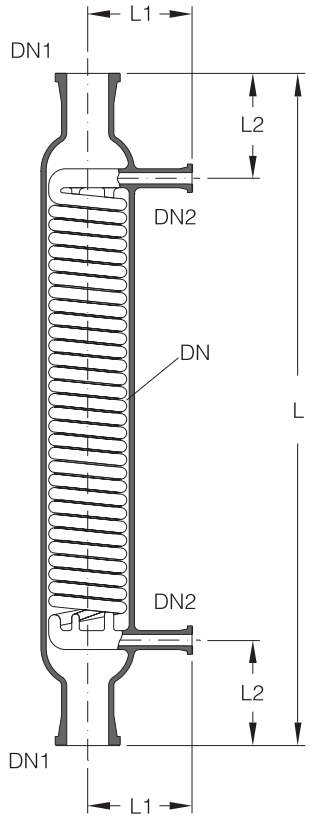

Technical data

Reference	Area (m²)	Capacity Coil (l)	Capacity Jacket (l)
HEG25/6	0.6	0.9	3.4
HEG50/6	0.6	0.9	3.6

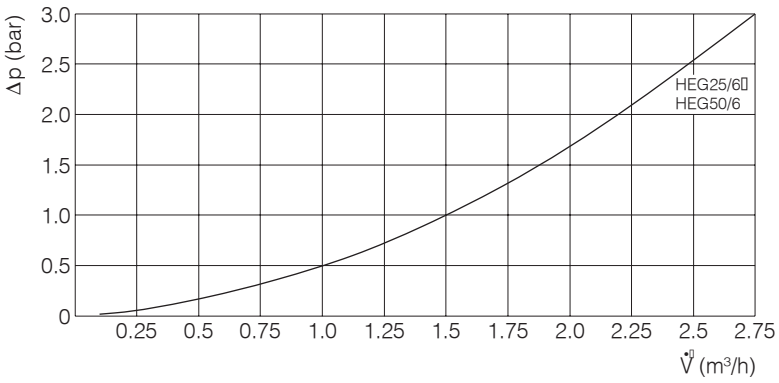

Pressure drop in the coil based on water at 20 °C

SHELL AND TUBE HEAT EXCHANGERS

Shell and tube heat exchangers provide a versatile alternative to the coil-type heat exchangers described on previous pages. They were conceived as condensers, but they are equally suitable for heat transfer between two liquids or gases.

These shell and tube heat exchangers are of modular construction. They comprise the following individual elements: tubular shell, headers, tube plates, heat exchange tubes and baffles. Sealing of the individual tubes in the tube plate is of particular importance. The threaded PTFE bushes and PTFE sealing rings provide a seal of the highest integrity between the different materials.

Four basic versions of shell and tube heat exchanger, with PTFE tube plates and borosilicate glass 3.3 or silicon carbide heat transfer tubes, are available as standard. They are listed on pages 5.16 to 5.19.

Performance data which can be used to estimate the heat transfer surface required is given on page 5.21. We would be happy to carry out accurate calculations for you using special programs.

The maximum permissible operating conditions in borosilicate glass 3.3 heat exchangers are detailed in the table below. If duties in excess of these figures are called for, we recommend the use of the special versions described on page 5.22.

DN	Area	Max. Temperature difference for Glass Heat Exchanger Tubes	Permissible operating temperature	Permissible operating pressure (bar g)			Permissible differential pressure for tube plate (bar)	
				Shell	Tube side			
	(m²)	(K)	(°C)		../..S..G	../..G..G	../..S..G	../..G..G
150	2,5-5	130	-50/+150	-1/+2	3	3	4	4
200	5-10	130	-50/+150	-1/+1	3	2	4	3
300	12,5-25	130	-50/+150	-1/+1	3	2	4	3

The standard branch positions are as indicated in the appropriate diagrams. Alternative positions are available on request.

When making connections to the service necks on the heat exchangers, bellows should be used to avoid imposing any stresses.

When installing shell and tube heat exchangers appropriate precautions should be taken. Details of these can be found in the installation and operating instructions supplied with each item.

The standard version of these heat exchangers is designed to be installed horizontally. If required, however, drain and venting facilities can be provided on the tube plates together with changes to the support arrangements on the units to permit vertical installation (please see page 5.20).

The end form, which depends on the nominal size, is shown in the diagram on page 5.2. Further information can be found in Section 1 »Technical Information«.

SHELL AND TUBE HEAT EXCHANGERS

Shell and Tube Heat Exchangers, both sides corrosion resistant

There are two versions of this type of heat exchanger, single pass (version A) and triple pass (version B). Both versions combine borosilicate glass 3.3 (shell, heat exchange tubes and headers) and PTFE (tube plates, bushes and baffles). Included in the supply are two support brackets which provide the basis for fixing to the support structure (see assembly dimensions).

If silicon carbide heat exchange tubes are required, please replace the applicable »G« in the catalogue reference with »S« (see Key to catalogue references). In these cases a prior check on the heat transfer area should be carried out.

Key to catalogue references

RBW 300 / 125 / G 3 G V

- V — Vertical installation
- G — Material of heat transfer tubes: G = Glass, S = SiC
- 3 — Number of passes
- G — Material of headers: G = Glass
- 125 — Area in m² x 10
- 300 — Nominal size

Dimensions

Reference	DN	Area (m²)	E1	E2	E3	E4	d
RBW150/25G..G	150	2.5	574	620	200	208	14
RBW150/32G..G	150	3,2	574	1120	200	208	14
RBW150/40G..G	150	4,0	574	1620	200	208	14
RBW150/50G..G	150	5,0	574	2120	200	208	14
RBW200/50G..G	200	5,0	677	917	200	243	14
RBW200/63G..G	200	6,3	677	1417	200	243	14
RBW200/80G..G	200	8,0	677	1917	200	243	14
RBW200/100G..G	200	10,0	677	2417	200	243	14
RBW300/125G..G	300	12,5	897	521	200	295	14
RBW300/160G..G	300	16,0	897	1021	200	295	14
RBW300/200G..G	300	20,0	897	1521	200	295	14
RBW300/250G..G	300	25,0	897	2021	200	295	14

SHELL AND TUBE HEAT EXCHANGERS

Shell and Tube Heat Exchangers, both sides corrosion resistant

DN	Area (m^2)	DN1	DN2	DN3	L	L1	L2	L3	L4	L5	Type	Reference
150	2.5	50	100	50	1774	332	1110	160	200	108	A	RBW150/25G1G
150	2.5	50	100	50	1774	332	1110	160	200	108	B	RBW150/25G3G
150	3,2	50	100	50	2274	332	1610	160	200	108	A	RBW150/32G1G
150	3,2	50	100	50	2274	332	1610	160	200	108	B	RBW150/32G3G
150	4,0	50	100	50	2774	332	2110	160	200	108	A	RBW150/40G1G
150	4,0	50	100	50	2774	332	2110	160	200	108	B	RBW150/40G3G
150	5,0	50	100	50	3274	332	2610	160	200	108	A	RBW150/50G1G
150	5,0	50	100	50	3274	332	2610	160	200	108	B	RBW150/50G3G
200	5,0	80	150	50	2282	386	1510	175	250	138	A	RBW200/50G1G
200	5,0	80	150	50	2282	386	1510	175	250	138	B	RBW200/50G3G
200	6,3	80	150	50	2782	386	2010	175	250	138	A	RBW200/63G1G
200	6,3	80	150	50	2782	386	2010	175	250	138	B	RBW200/63G3G
200	8,0	80	150	50	3282	386	2510	175	250	138	A	RBW200/80G1G
200	8,0	80	150	50	3282	386	2510	175	250	138	B	RBW200/80G3G
200	10,0	80	150	50	3782	386	3010	175	250	138	A	RBW200/100G1G
200	10,0	80	150	50	3782	386	3010	175	250	138	B	RBW200/100G3G
300	12,5	100	200	50	2318	504	1310	235	275	180	A	RBW300/125G1G
300	12,5	100	200	50	2318	504	1310	235	275	180	B	RBW300/125G3G
300	16,0	100	200	50	2818	504	1810	235	275	180	A	RBW300/160G1G
300	16,0	100	200	50	2818	504	1810	235	275	180	B	RBW300/160G3G
300	20,0	100	200	50	3318	504	2310	235	275	180	A	RBW300/200G1G
300	20,0	100	200	50	3318	504	2310	235	275	180	B	RBW300/200G3G
300	25,0	100	200	50	3818	504	2810	235	275	180	A	RBW300/250G1G
300	25,0	100	200	50	3818	504	2810	235	275	180	B	RBW300/250G3G

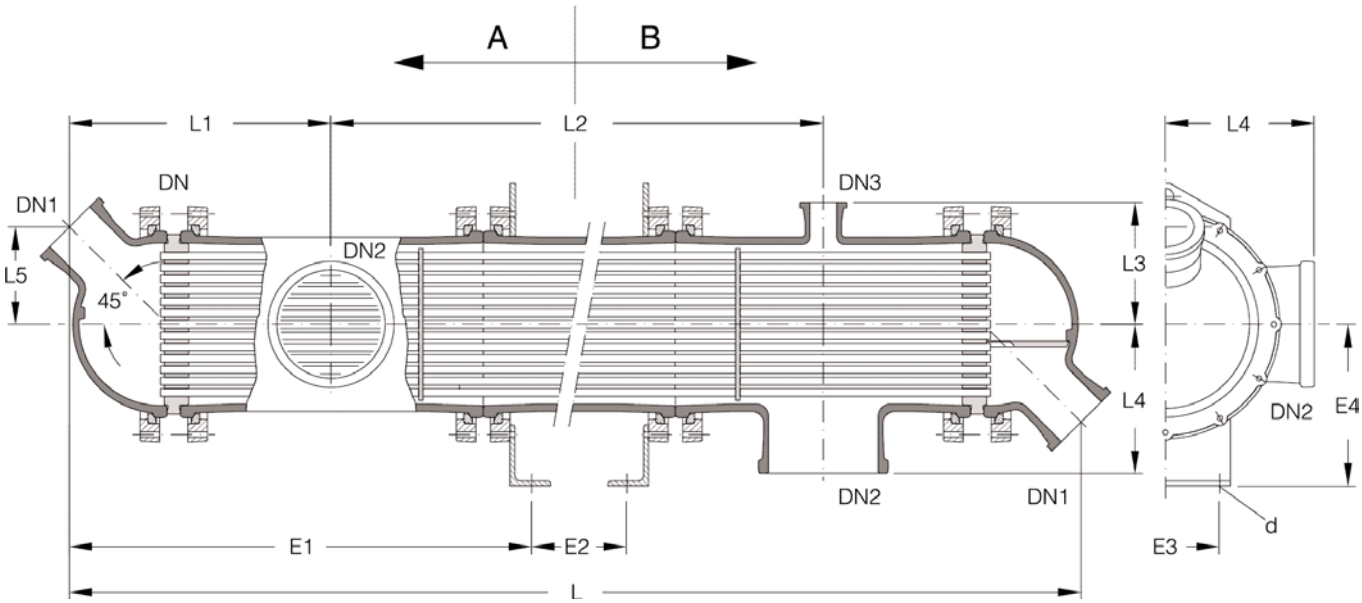

SHELL AND TUBE HEAT EXCHANGERS

Shell and Tube Heat Exchangers, shell side corrosion resistant

There are also two versions of this type of heat exchanger, single pass (version A) and triple pass (version B). Both versions use borosilicate glass 3.3 (shell and heat exchange tubes) and PTFE (tube plates, bushes and baffles) in combination with stainless steel headers. Included in the supply are two support brackets which provide the basis for fixing to the support structure (see assembly dimensions).

If silicon carbide heat exchange tubes are required, please replace the applicable »G« in the catalogue reference with »S« (see Key to catalogue references). In these cases a prior check on the heat transfer area should be carried out.

Key to catalogue references

RBW 300 / 125 / S 3 G V

- V — Vertical installation
- G — Material of heat transfer tubes: G = Glass, S = SiC
- 3 — Number of passes
- S — Material of headers: S = Steel
- 125 — Area in m^2 x 10
- 300 — Nominal size

Dimensions

Reference	DN	Area (m^2)	E1	E2	E3	E4	d
RBW150/25S..G	150	2.5	565	620	200	208	14
RBW150/32S..G	150	3,2	565	1120	200	208	14
RBW150/40S..G	150	4,0	565	1620	200	208	14
RBW150/50S..G	150	5,0	565	2120	200	208	14
RBW200/50S..G	200	5,0	691	917	200	243	14
RBW200/63S..G	200	6,3	691	1417	200	243	14
RBW200/80S..G	200	8,0	691	1917	200	243	14
RBW200/100S..G	200	10,0	691	2417	200	243	14
RBW300/125S..G	300	12,5	916	521	200	295	14
RBW300/160S..G	300	16,0	916	1021	200	295	14
RBW300/200S..G	300	20,0	916	1521	200	295	14
RBW300/250S..G	300	25,0	916	2021	200	295	14

SHELL AND TUBE HEAT EXCHANGERS

Shell and Tube Heat Exchangers, shell side corrosion resistant

DN	Area (m^2)	DN1	DN2	DN3	L	L1	L2	L3	L4	L5	Type	Reference
150	2.5	40	100	50	1750	320	1110	160	200	55	A	RBW150/25S1G
150	2.5	40	100	50	1750	320	1110	160	200	55	B	RBW150/25S3G
150	3,2	40	100	50	2250	320	1610	160	200	55	A	RBW150/32S1G
150	3,2	40	100	50	2250	320	1610	160	200	55	B	RBW150/32S3G
150	4,0	40	100	50	2750	320	2110	160	200	55	A	RBW150/40S1G
150	4,0	40	100	50	2750	320	2110	160	200	55	B	RBW150/40S3G
150	5,0	40	100	50	3250	320	2610	160	200	55	A	RBW150/50S1G
150	5,0	40	100	50	3250	320	2610	160	200	55	B	RBW150/50S3G
200	5,0	50	150	50	2300	395	1510	175	250	77	A	RBW200/50S1G
200	5,0	50	150	50	2300	395	1510	175	250	77	B	RBW200/50S3G
200	6,3	50	150	50	2800	395	2010	175	250	77	A	RBW200/63S1G
200	6,3	50	150	50	2800	395	2010	175	250	77	B	RBW200/63S3G
200	8,0	50	150	50	3300	395	2510	175	250	77	A	RBW200/80S1G
200	8,0	50	150	50	3300	395	2510	175	250	77	B	RBW200/80S3G
200	10,0	50	150	50	3800	395	3010	175	250	77	A	RBW200/100S1G
200	10,0	50	150	50	3800	395	3010	175	250	77	B	RBW200/100S3G
300	12,5	80	200	50	2350	520	1310	235	275	112	A	RBW300/125S1G
300	12,5	80	200	50	2350	520	1310	235	275	112	B	RBW300/125S3G
300	16,0	80	200	50	2850	520	1810	235	275	112	A	RBW300/160S1G
300	16,0	80	200	50	2850	520	1810	235	275	112	B	RBW300/160S3G
300	20,0	80	200	50	3350	520	2310	235	275	112	A	RBW300/200S1G
300	20,0	80	200	50	3350	520	2310	235	275	112	B	RBW300/200S3G
300	25,0	80	200	50	3850	520	2810	235	275	112	A	RBW300/250S1G
300	25,0	80	200	50	3850	520	2810	235	275	112	B	RBW300/250S3G

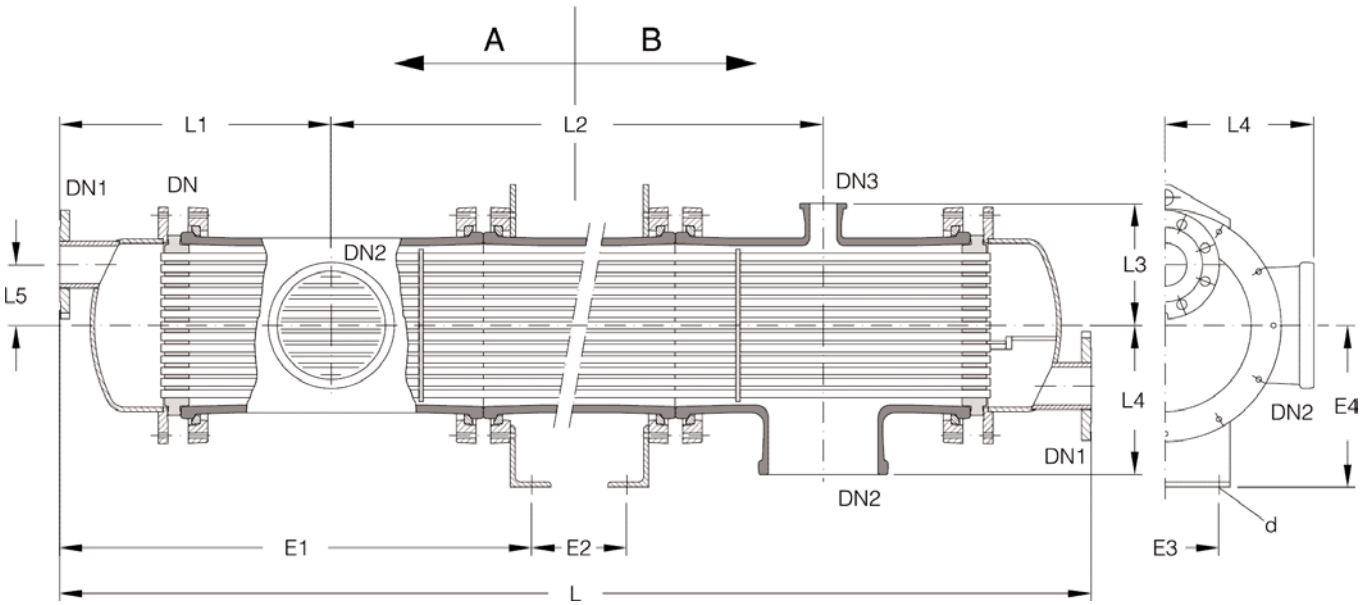

SHELL AND TUBE HEAT EXCHANGERS

Shell and Tube Heat Exchangers for vertical installation

All the heat exchangers described on pages 5.16 to 5.19 can also be supplied for vertical installation. The tube plates are then fitted with suitable venting and draining arrangements. Included in the supply is also a support frame which provide the basis for fixing to the support structure (see assembly dimensions).

In such cases a »V« should be added to the catalogue reference (see Key to catalogue references) for the particular heat exchanger (see pages 5.17 to 5.19).

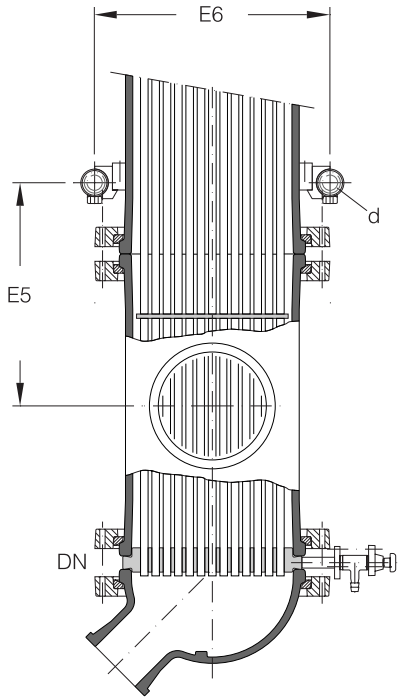

Key to catalogue references

RBW 300 / 125 / S 3 G V

- V — Vertical installation
- G — Material of heat transfer tubes: G = Glass, S = SiC
- 3 — Number of passes
- S — Material of headers: S = Steel, G = Glass
- 125 — Area in m² x 10
- 300 — Nominal size

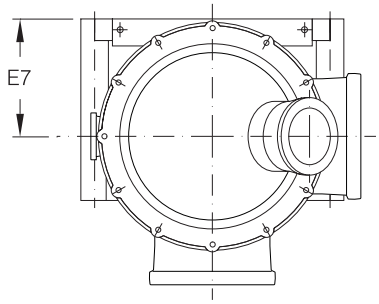

Dimensions

Reference	DN	Area (m²)	E5	E6	E7	d
RBW150/25..GV	150	2.5	300	300	148	42
RBW150/32..GV	150	3,2	300	300	148	42
RBW150/40..GV	150	4,0	300	300	148	42
RBW150/50..GV	150	5,0	300	300	148	42
RBW200/50..GV	200	5,0	375	305	168	42
RBW200/63..GV	200	6,3	375	305	168	42
RBW200/80..GV	200	8,0	375	305	168	42
RBW200/100..GV	200	10,0	375	305	168	42
RBW300/125..GV	300	12,5	425	436	218	42
RBW300/160..GV	300	16,0	425	436	218	42
RBW300/200..GV	300	20,0	425	436	218	42
RBW300/250..GV	300	25,0	425	436	218	42

SHELL AND TUBE HEAT EXCHANGERS

Performance data

An approximate calculation of heat transfer surface areas can be based on the following guide figures for heat exchange values.

Type of heat transfer	Fluid	Heat transf. coeff. ($Wm^{-2} K^{-1}$) for tubes made of	
		Glass	SiC
Liquid-liquid	Water-water	330-560	650-1800
	Water-organic solvent	300-500	500-1400
	Water-heat transfer oil	220-400	400-800
Liquid-gas	Water-air	15-90	15-90
Condensation	Water-water	520-640	1400-3100
	Water-organic solvent	400-580	900-2100

Technical data

Reference	Area	Number of Tubes (Ø14 x 1,5)	Free cross sectional area		Capacity	
			Tubes	Shell	Tubes and headers	Shell
	(m^2)	-	(cm^2)	(cm^2)	(l)	(l)
RBW150/25..1..	2,5	37	35	120	9,0	18
RBW150/32..1..	3,2	37	35	120	10,0	24
RBW150/40..1..	4,0	37	35	120	12,5	30
RBW150/50..1..	5,0	37	35	120	14,0	36
RBW200/50..1..	5,0	61	58	220	19,0	47
RBW200/63..1..	6,3	61	58	220	22,0	58
RBW200/80..1..	8,0	61	58	220	25,0	69
RBW200/100..1..	10,0	61	58	220	28,0	80
RBW300/125..1..	12,5	163	155	456	53,5	94
RBW300/160..1..	16,0	163	155	456	61,0	117
RBW300/200..1..	20,0	163	155	456	69,0	140
RBW300/250..1..	25,0	163	155	456	75,5	163
RBW150/25..3..	2,5	37	11,7	120	9,0	18
RBW150/32..3..	3,2	37	11,7	120	10,0	24
RBW150/40..3..	4,0	37	11,7	120	12,5	30
RBW150/50..3..	5,0	37	11,7	120	14,0	36
RBW200/50..3..	5,0	61	19,3	220	19,0	47
RBW200/63..3..	6,3	61	19,3	220	22,0	58
RBW200/80..3..	8,0	61	19,3	220	25,0	69
RBW200/100..3..	10,0	61	19,3	220	28,0	80
RBW300/125..3..	12,5	163	51,6	456	53,5	94
RBW300/160..3..	16,0	163	51,6	456	61,0	117
RBW300/200..3..	20,0	163	51,6	456	69,0	140
RBW300/250..3..	25,0	163	51,6	456	75,5	163

Heat exchanger DN 300 with metal headers have only 162 tubes, because of the central plate support.

SHELL AND TUBE HEAT EXCHANGERS

Shell and Tube Heat Exchangers, special versions

Because of the modular design of the standard heat exchangers (see page 5.15), a wide variety of alternative materials can also be supplied and this facilitates adaptation of the heat exchangers to the particular requirements of each case. Details can be found in the table below and our special brochure which is available on request.

Nominal size		DN	50 - 450
Heat exchange area		m^2	up to 60
Outside diameter of internal tubes		mm	14 or larger
Number of tube side passes		-	1 - 4
Permissible operating conditions	Pressure	bar g	max. 10
	Temperature	°C	max. 180
	Differential pressure (tube/shell)	bar	max. 6
Materials	Shell	-	Borosilicate glass 3.3 Stainless steel Steel, glass lined or coated Special materials
	Headers	-	Borosilicate glass 3.3 Stainless steel Steel, glass lined or coated
	Tube plates	-	PTFE, solid CORETHERM type
	Bushes and gaskets	-	PTFE
	Baffles	-	PTFE
	Heat exchange tubes	-	Borosilicate glass 3.3 Silicon carbide Stainless steel Special materials

Additional features which can be supplied on request are:

- Turbulence devices for fitting in the heat exchange tubes. These increase heat transfer in the tubes by up to three times the normally attainable value.
- Double tube plates that ensure trouble-free separation of the shell-side and tube-side pressure area. Risks caused by leakage, for example the contamination of the product by the heating or cooling fluid, are thus avoided. This is of importance above all else for plant which has to conform to GMP requirements.

METAL - IMMERSION HEAT EXCHANGERS

Our range of metal immersion heat exchangers are used specifically in applications where higher steam pressures and/or larger heat transfer surfaces are required.

The properties of the product should be taken into account when selecting the material of construction (coil and circular ring immersion heat exchangers for example are supplied as standard in stainless steel).

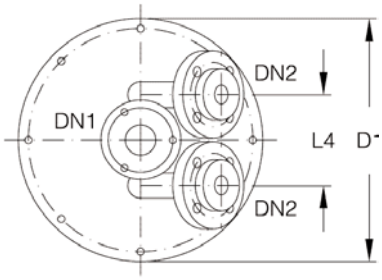

Coil-Type - Immersion Heat Exchangers

This versatile heat exchanger is used for the heating of spherical and cylindrical vessels (please see section 4 »Vessels & Stirrers«) and at the bottom of columns (please see section 5 »Column Components«). The heating coil is welded to a bottom plate which incorporates a branch with flange drilled to suit QVF PCD hole size and number. Hoses can be supplied for the steam and condensate connections (see section 9 »Couplings«).

Coil-type immersion heat exchangers are supplied as standard in stainless steel. They are also available, however, in hastelloy on request.

The maximum permissible operating pressure for these coil-type immersion heat exchangers is 20 bar g and the maximum operating temperature is 300 °C (PN 40 steam and condensate connection, EN 1092).

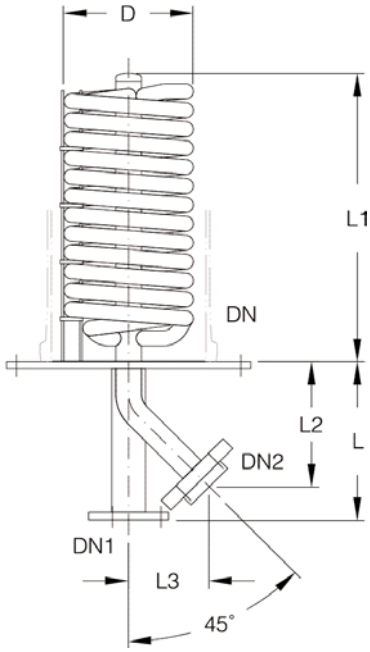

Area (m²)	DN	DN1	DN2	D	D1	L	L1	L2	L3	L4	Capacity (l)	Reference
0,15	150	25	2 x 25	145	274	210	235	166	106	120	1,0	**EH150/1.5**
0,25	150	25	2 x 25	145	274	210	375	166	106	120	1,6	**EH150/2.5**
0,25	200	40	2 x 25	170	321	210	255	166	106	120	1,8	**EH200/2.5**
0,5	200	40	2 x 25	170	321	210	380	166	106	120	2,7	**EH200/5**
0,8	200	40	2 x 25	170	321	210	555	166	106	120	3,9	**EH200/8**
1,0	200	40	2 x 25	170	321	210	655	166	106	120	4,6	**EH200/10**
1,5	200	40	2 x 25	170	321	210	930	166	106	120	6,6	**EH200/15**
1,5	300	40	2 x 25	250	420	215	555	171	106	170	6,5	**EH300/15**
2,0	300	40	2 x 25	250	420	215	705	171	106	170	8,0	**EH300/20**
3,0	300	40	2 x 25	250	420	215	1005	171	106	170	10,0	**EH300/30**

METAL - IMMERSION HEAT EXCHANGERS

Circular Ring Type - Immersion Heat Exchangers

These items are recommended for use in spherical vessels as they yield high heat transfer and evaporation performance in conjunction with a turbine stirrer fitted centrally. The forced circulation across the heat transfer surface results in evaporation down to a very low residual volume. Other advantages are the smooth surface, the baffle fitted inside to create turbulence and the integral branch with QVF taper for a »BAS40« borosilicate glass 3.3 bottom outlet valve (see section 3 »Valves«). Hoses can be supplied for the steam and condensate connections (see chapter 9 »Couplings«).

Circular ring immersion heat exchangers are supplied as standard in stainless steel. They are also available, however, in titanium, tantalum or hastelloy on request.

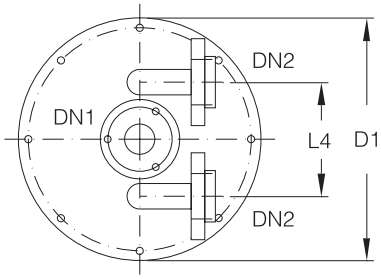

The maximum permissible operating pressure for circular ring immersion heat exchangers is 6 bar g and the maximum operating temperature is 200 °C (PN 40 steam and condensate connection, EN 1092).

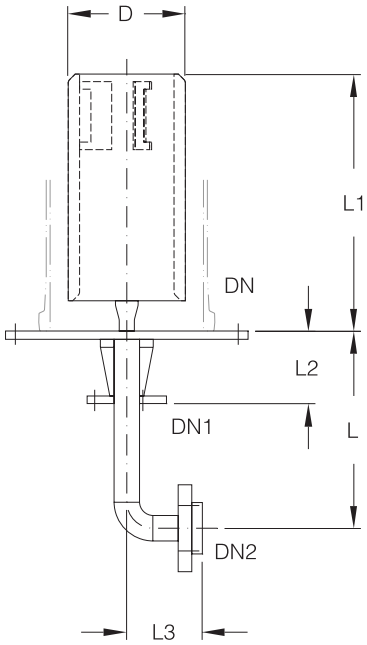

Area (m²)	DN	DN1	DN2	D	D1	L	L1	L2	L3	L4	Capacity (l)	Reference
0,15	200	40	2 x 25	155	321	261	225	96	100	151	0,75	**KRH200/1.5**
0,2	200	40	2 x 25	155	321	261	285	96	100	151	1,0	**KRH200/2**
0,25	200	40	2 x 25	155	321	261	340	96	100	151	1,25	**KRH200/2.5**
0,3	300	40	2 x 25	235	420	265	295	100	100	210	3,0	**KRH300/3**
0,35	300	40	2 x 25	235	420	265	330	100	100	210	3,5	**KRH300/3.5**
0,4	300	40	2 x 25	235	420	265	370	100	100	210	4,0	**KRH300/4**
0,45	300	40	2 x 25	235	420	265	405	100	100	210	4,5	**KRH300/4.5**
0,5	300	40	2 x 25	235	420	265	445	100	100	210	5,0	**KRH300/5**

METAL - IMMERSION HEAT EXCHANGERS

Bayonet Type - Immersion Heat Exchangers

There is a very wide range of applications for this type of heat exchanger, particularly where a high level of corrosion resistance is required. Typical applications include use as boilers in circulatory evaporators and for heating columns. The design incorporating multiple bayonets ensures good heat transfer even when larger heat transfer surfaces are involved.

Bayonet immersion heat exchangers can be supplied in nominal sizes DN 80 to DN 600 with heat transfer areas from 0.05 to 8.5 m2.

The base of these boilers is designed to act as a vapour distributor and condensate collector. A branch drilled to suit QVF PCD hole size and number welded through the base serves as a product connection. Hoses can be supplied for the steam and condensate connections (please see chapter 9 »Couplings«).

Bayonet immersion heat exchangers are supplied in tantalum as standard. Other materials are, however, also available.

The maximum permissible operating pressure for bayonet immersion heat exchangers is 10 bar g and the maximum operating temperature is 210 °C (PN 40 steam and condensate connection, EN 1092).

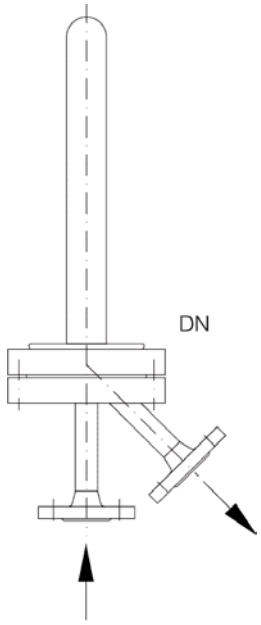

DN80 - DN100
0,05m² - 0,4m²

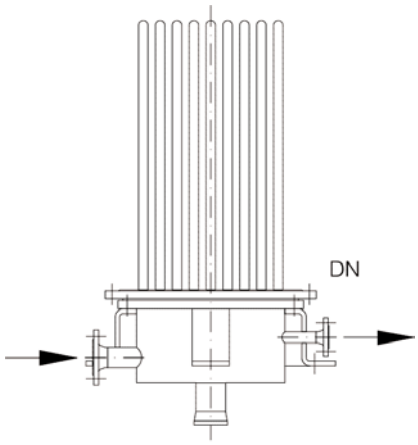

DN150 - DN600
0,1m² - 8,5m²